WALL CABINET
ASSEMBLY INSTRUCTION

W3012
W3612
W2415
W3015
W3615
W3018
W3618
W3021
W3621

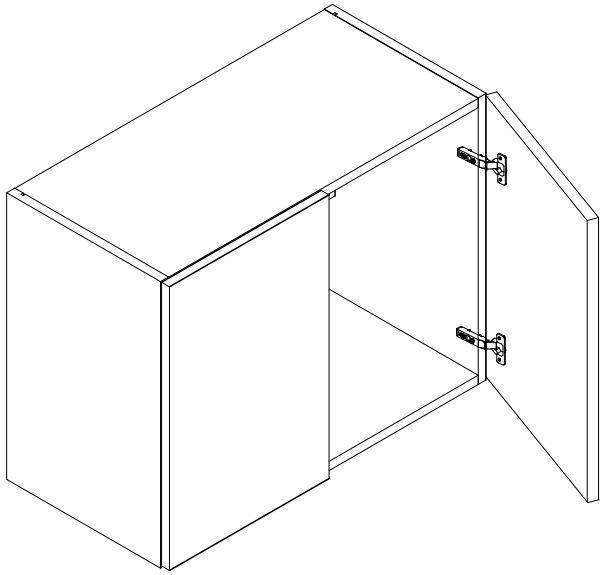

Assembly instructions

Carefully read the Instructions before starting the installation.

During assembly, please follow all generally accepted safety procedures.

If you are missing any part, please stop and contact us immediately at

Hardware Fitting		
Hinge	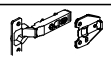	4PCS
Screws	 4*16	24PCS
Bumper		4PCS
Cabinet Screws	 7*50	12CS

Left Side Panel	1PC
Right Side Panel	1PC
Bottom Panel	1PC
Back Panel	1PC
Support Rail	2set
Top Panel	1PC

Step1

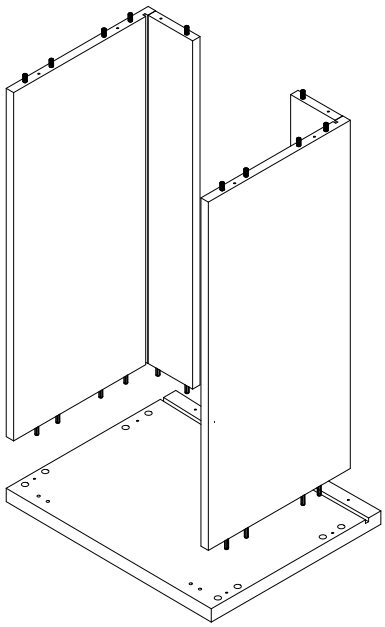

Step2

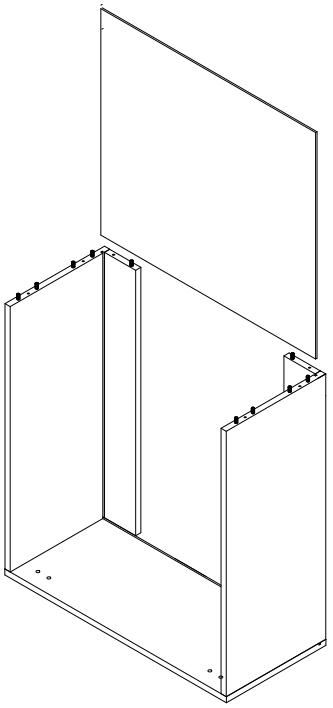

Step3

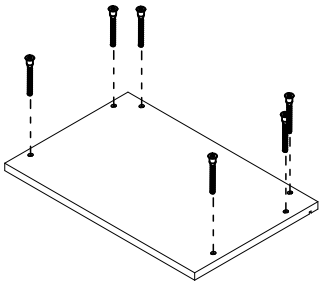

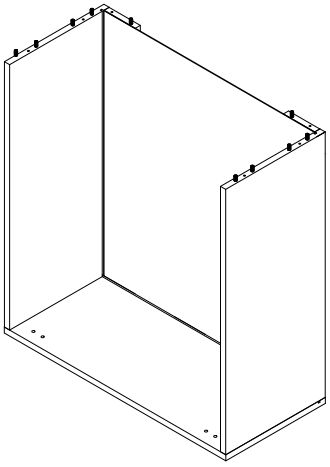

Step4

