WALL CABINET
ASSEMBLY INSTRUCTION

WBC2730

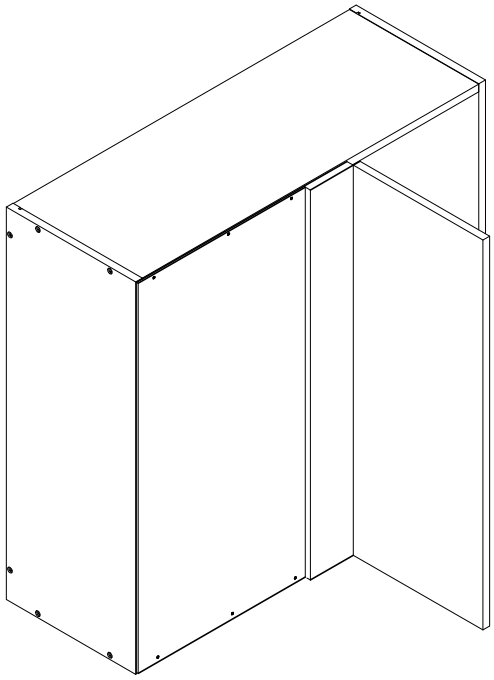

Assembly instructions

Carefully read the Instructions before starting the installation.

During assembly, please follow all generally accepted safety procedures.

If you are missing any part, please stop and contact us immediately at

Hardware Fitting		
Hinge		2PCS
Shelf Support		8PCS
Bumper		6PCS
Cabinet Screws	 7*50	12CS
Screws	4*16	14PCS

Left Side Panel	1PC
Right Side Panel	1PC
Bottom Panel	1PC
Back Panel	1PC
Support Rail	2PCS
Top Panel	1PC
Removable Shelf	1PC
Blind baffle 2	1PC

Step1

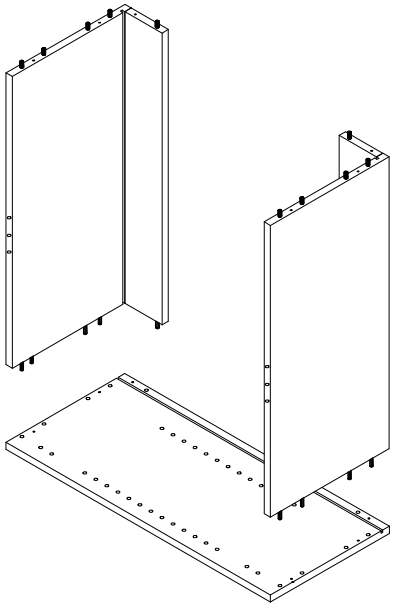

Step2

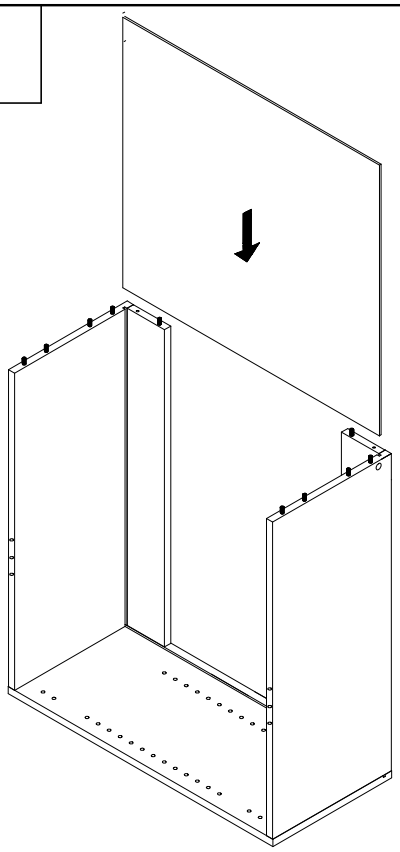

Step3

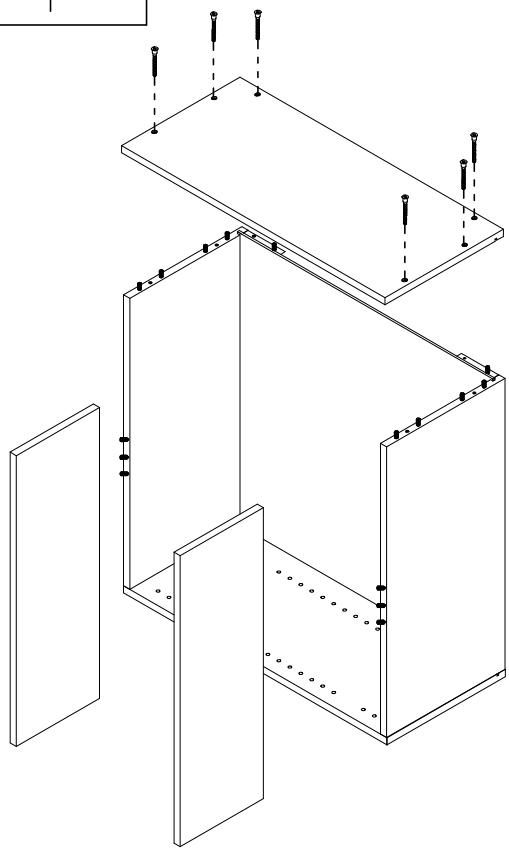

Step4

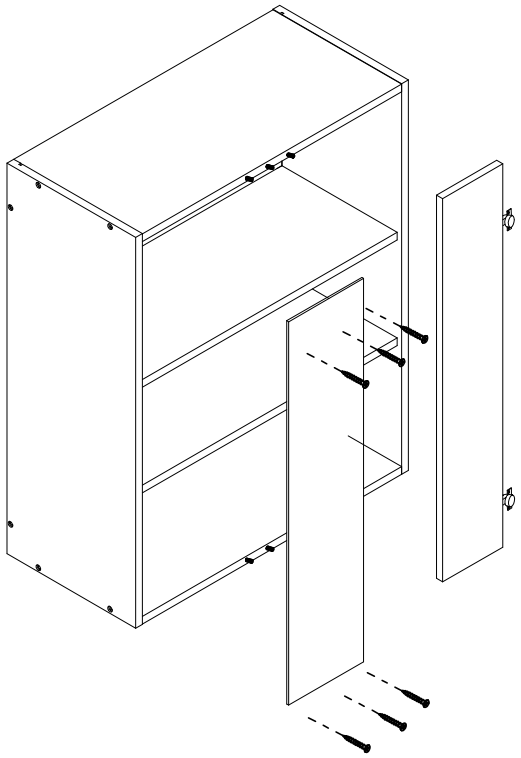

Step5

